THIS DRAWING IS THE PROPERTY OF ACREFINE ENGINEERING SERVICES LTD. IT CANNOT BE COPIED OR DISTRIBUTED WITHOUT THE PERMISSION OF ACREFINE ENGINEERING SERVICES LTD. © www.acrefine.com

REV	DESCRIPTION	DATE	BY	APP'L
4	Unit weight and creep note added; curves revised.	10.11.2026	MMD	EK

APPROVED DRAWING
EK
10.11.2026
CAD

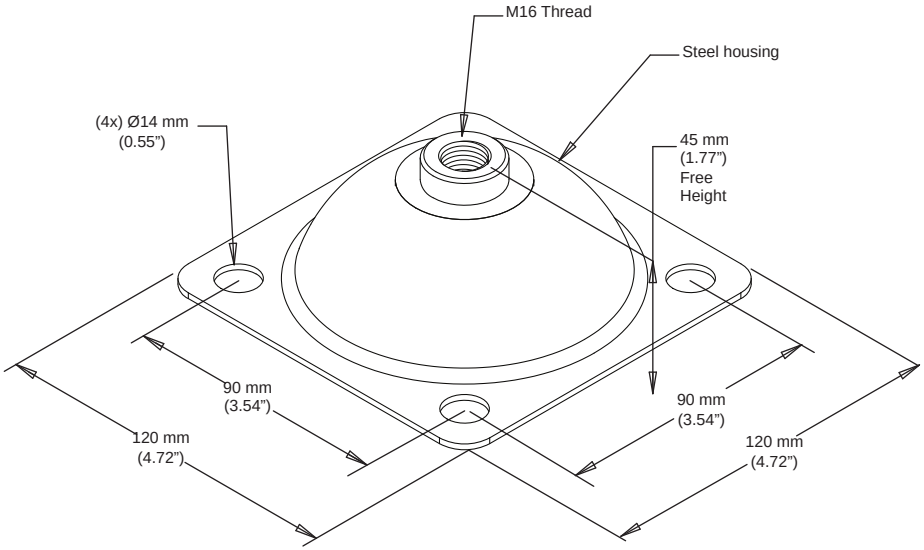

Load - Deflection Graph

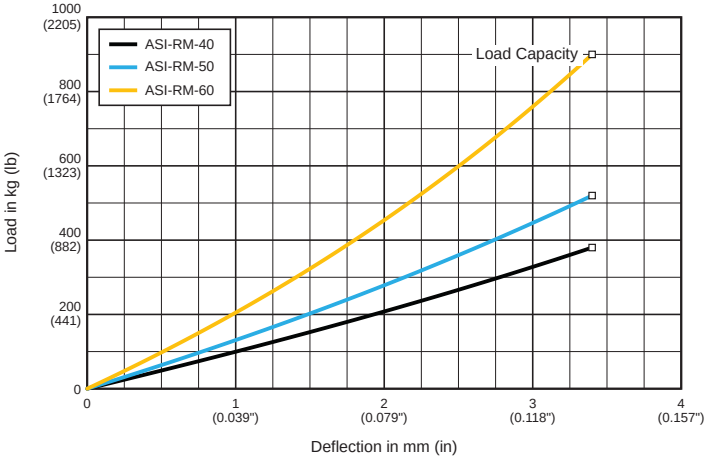

ISOLATOR TYPE	ISOLATOR PROPERTIES						
	Colour Mark	Shore A Hardness	METRIC		IMPERIAL		Unit weight (kg)
			Nominal Deflection (mm)	Load Capacity (kg)	Nominal Deflection (in)	Load Capacity (lb)	
ASI-RM-40	—	40	3.40	380	0.13"	838	0.49
ASI-RM-50	Blue	50	3.40	520	0.13"	1146	0.49
ASI-RM-60	Yellow	60	3.40	900	0.13"	1984	0.49

Colour marks are identification codes; printed colours are indicative only.

NOTES:
1. Deflections are short-term values; allow for c. 20% creep under sustained load.
2. Unit weight is the weight of the isolator alone; packaging is not included.
3. Isolator must be installed per Installation Instruction 9050.
4. For more information, watch the product video at:
   https://www.youtube.com/watch?v=wjf7YDtzHL4

POD
PERFORMANCE OUTLINE DRAWING

ASI-RM Type Restrained Rubber Mount

ACREFINE ENGINEERING

PROJECT INFORMATION			
CUSTOMER		PROJECT NAME	
ENGINEER			
DATE		LOCATION	
PROJECT No.			

DRAWING No.	8051	REV
DRAWN BY	MMD	4
DATE	10.11.2026	
SCALE	NTS	Page 1 of 2

THIS DRAWING IS THE PROPERTY OF ACREFINE ENGINEERING SERVICES LTD. IT CANNOT BE COPIED OR DISTRIBUTED WITHOUT THE PERMISSION OF ACREFINE ENGINEERING SERVICES LTD. © www.acrefine.com

REV	DESCRIPTION	DATE	BY	APP'L
4	Unit weight and creep note added; curves revised.	10.11.2026	MMD	EK

Vibration Isolation and Noise Control Properties of ASI-RM Type Restrained Rubber Mount

NATURAL FREQUENCY CURVES

(estimated from static deflection, per industry practice)

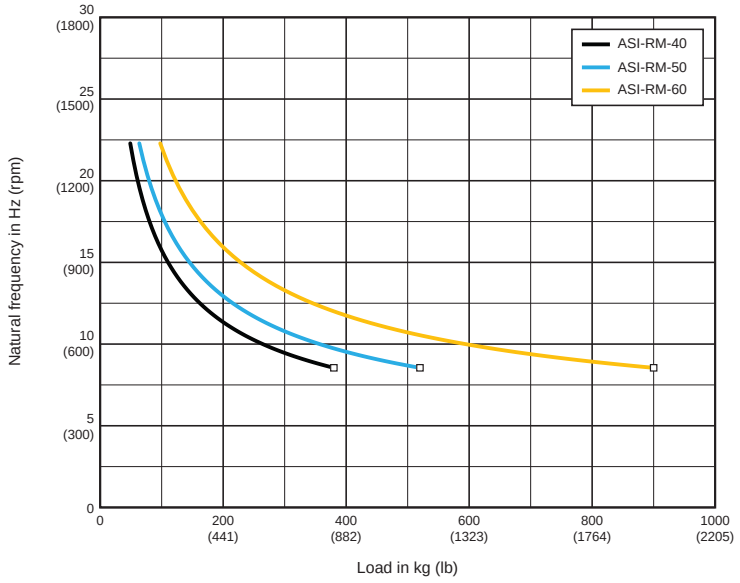

STATIC SECANT STIFFNESS

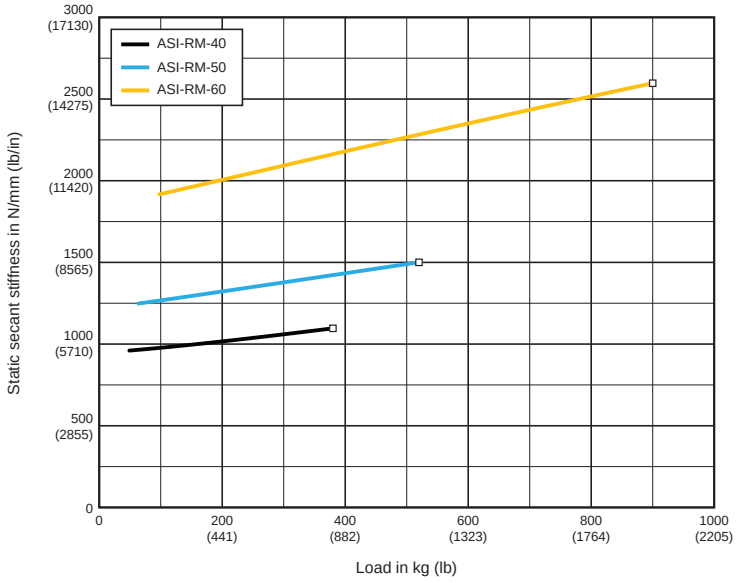

NOTES:
1. Load capacity (□) is marked; curves end at the load capacity.
2. Natural frequency is estimated from static deflection: f = 15.76 / √δ (f in Hz, δ in mm).
3. Static secant stiffness k = 9.81 × load / δ (k in N/mm, load in kg, δ in mm).

Disclaimer: The information provided in these technical documents constitutes a summary related to the product itself and not the intended application. We do recommend that you seek further advice regarding actual field application from our engineers or authorised partners. The latest version of this document is available to download from www.acrefine.com.

POD
PERFORMANCE OUTLINE DRAWING

ASI-RM Type Restrained Rubber Mount

ACREFINE ENGINEERING

PROJECT INFORMATION			
CUSTOMER		PROJECT NAME	
ENGINEER			
DATE		LOCATION	
PROJECT No.			

DRAWING No.	8051	REV
DRAWN BY	MMD	4
DATE	10.11.2026	
SCALE	NTS	Page 2 of 2