THIS DRAWING IS THE PROPERTY OF ACREFINE ENGINEERING SERVICES LTD. IT CANNOT BE COPIED OR DISTRIBUTED WITHOUT THE PERMISSION OF ACREFINE ENGINEERING SERVICES LTD. © www.acrefine.com

REV	DESCRIPTION	DATE	BY	APP'L
4	Load table, isolation curve and notes revised.	11.11.2026	MMD	EK

APPROVED DRAWING
EK
11.11.2026
CAD

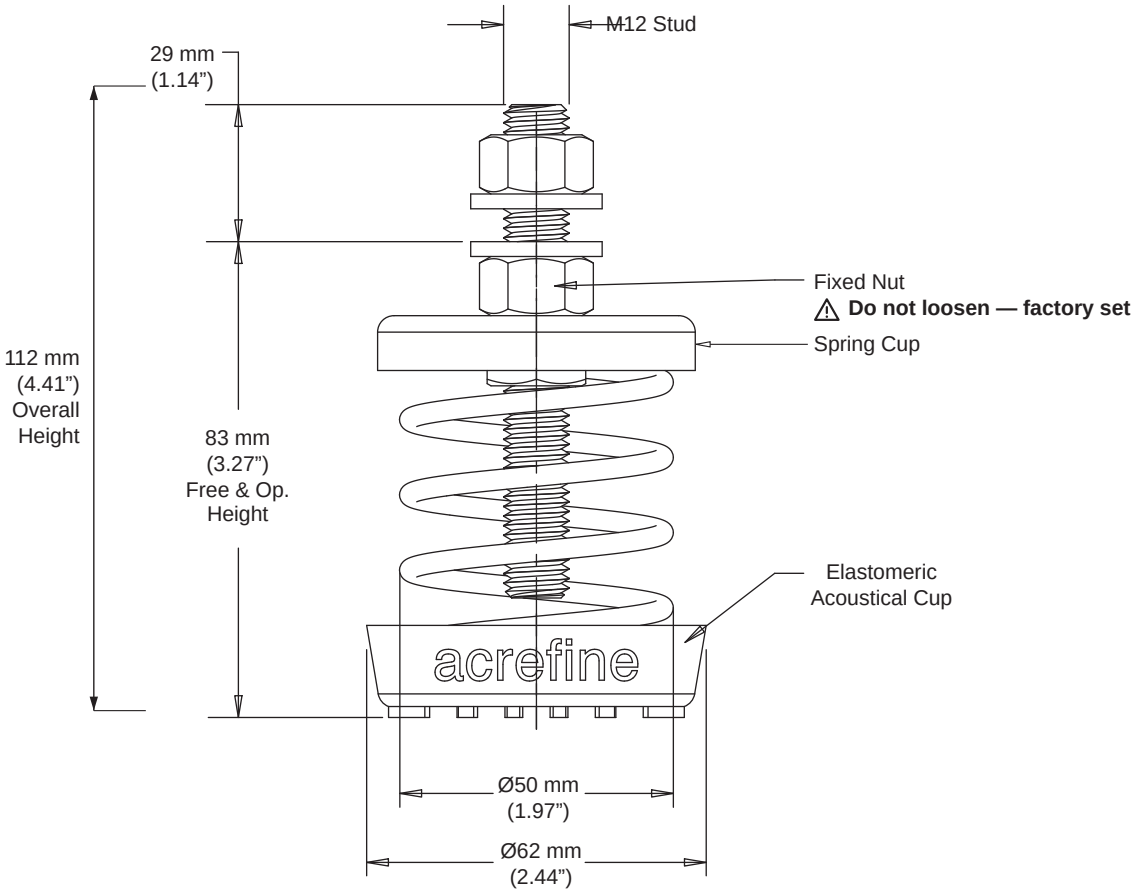

ISOLATOR PROPERTIES

ISOLATOR TYPE	Load Capacity (kg)	Load Capacity (lb)	Outer Spring Colour	Inner Spring Colour	Unit weight (kg)
AVI-S-1A-7	7	15	Grey	—	0.36
AVI-S-1A-12	12	26	Green	—	0.36
AVI-S-1A-25	25	55	Blue	—	0.36
AVI-S-1A-50	50	110	Beige	—	0.39
AVI-S-1A-70	70	154	Red	—	0.40
AVI-S-1A-95	95	209	White	—	0.43
AVI-S-1A-140	140	309	Black	—	0.44
AVI-S-1A-185	185	408	Yellow	—	0.44
AVI-S-1A-230	230	507	Black	Green	0.53
AVI-S-1A-275	275	606	Yellow	Green	0.53

Spring colours are identification codes; printed colours are indicative only.

NOTES:

1. Specified Load Capacity is the maximum allowable load for a single isolator and this value must not be exceeded.
2. The load capacities apply where the isolator carries its nominal deflection of 25 mm (1"). At part load the deflection is smaller, the natural frequency is higher and isolation at a given speed is lower.
3. Overall height is measured from the base to the top of the stud. It is the set-up height at nominal deflection: the springs compress as the equipment is placed, and the height is restored by winding each spring cup down its stud.
4. Unit weight is the weight of the isolator alone; packaging is not included.
5. Isolators must be installed per Installation Instruction 9110.
6. For correct installation, refer to the instructional video at: https://www.youtube.com/watch?v=MXNaMSJzCEc

POD
PERFORMANCE OUTLINE DRAWING

AVI-S-1A Type Open Spring Isolator with 1" Deflection

ACREFINE ENGINEERING

PROJECT INFORMATION			
CUSTOMER		PROJECT NAME	
ENGINEER			
DATE		LOCATION	
PROJECT No.			

DRAWING No.	8150	REV
DRAWN BY	MMD	4
DATE	11.11.2026	
SCALE	NTS	Page 1 of 2

THIS DRAWING IS THE PROPERTY OF ACREFINE ENGINEERING SERVICES LTD. IT CANNOT BE COPIED OR DISTRIBUTED WITHOUT THE PERMISSION OF ACREFINE ENGINEERING SERVICES LTD. © www.acrefine.com

REV	DESCRIPTION	DATE	BY	APP'L
4	Load table, isolation curve and notes revised.	11.11.2026	MMD	EK

Vibration Isolation Performance of AVI-S-1A Type Open Spring Isolator

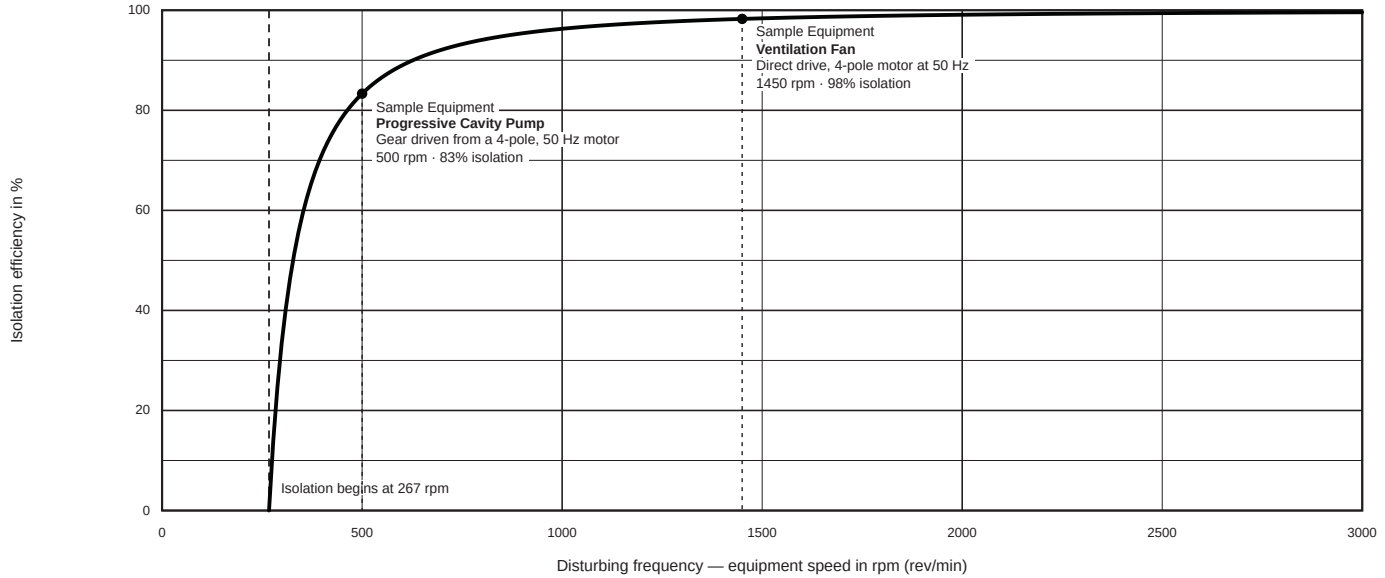

NOTES:

1. The curve applies at the Specified Load Capacity, where the isolator carries its nominal deflection of 25 mm (1") and a natural frequency of 3.15 Hz. At part load the deflection is smaller, the natural frequency is higher and isolation at a given speed is lower.
2. Efficiency is calculated for an undamped single-degree-of-freedom system on a rigid support: $T = 1 / ((f/fn)^2 - 1)$, efficiency = $(1 - T) \times 100$. Below 267 rev/min the isolator amplifies, not isolates.
3. A supporting floor that is not stiff relative to the isolator will reduce the efficiency shown.
4. Sample equipment is shown to illustrate typical operating speeds only.

Disclaimer: The information provided in these technical documents constitutes a summary related to the product itself and not the intended application. We do recommend that you seek further advice regarding actual field application from our engineers or authorised partners. The latest version of this document is available to download from www.acrefine.com.

POD
PERFORMANCE OUTLINE DRAWING

AVI-S-1A Type Open Spring Isolator with 1" Deflection

ACREFINE ENGINEERING

PROJECT INFORMATION			
CUSTOMER		PROJECT NAME	
ENGINEER			
DATE		LOCATION	
PROJECT No.			

DRAWING No.	8150	REV	4
DRAWN BY	MMD		
DATE	11.11.2026		
SCALE	NTS	Page 2 of 2	